International
IOR Rectifier

PD - 95646

IRG4PC40KPbF

INSULATED GATE BIPOLAR TRANSISTOR

Short Circuit Rated
UltraFast IGBT

Features

- Short Circuit Rated UltraFast: Optimized for high operating frequencies >5.0 kHz , and Short Circuit Rated to 10µs @ 125°C, V_{GE} = 15V
- Generation 4 IGBT design provides higher efficiency than Generation 3
- Industry standard TO-247AC package
- Lead-Free

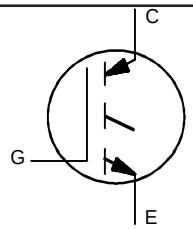

n-channel

V_{CES} = 600V

$V_{CE(on)\ typ.}$ = 2.1V

@V_{GE} = 15V, I_C = 25A

Benefits

- Generation 4 IGBTs offer highest efficiency available
- IGBTs optimized for specified application conditions

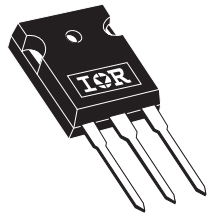

TO-247AC

Absolute Maximum Ratings

	Parameter	Max.	Units
V_{CES}	Collector-to-Emitter Voltage	600	V
I_C @ T_C = 25°C	Continuous Collector Current	42	A
I_C @ T_C = 100°C	Continuous Collector Current	25	
I_{CM}	Pulsed Collector Current ①	84	
I_{LM}	Clamped Inductive Load Current ②	84	
t_{sc}	Short Circuit Withstand Time	10	µs
V_{GE}	Gate-to-Emitter Voltage	±20	V
E_{ARV}	Reverse Voltage Avalanche Energy ③	15	mJ
P_D @ T_C = 25°C	Maximum Power Dissipation	160	W
P_D @ T_C = 100°C	Maximum Power Dissipation	65	
T_J T_{STG}	Operating Junction and Storage Temperature Range	-55 to +150	°C
	Soldering Temperature, for 10 sec.	300 (0.063 in. (1.6mm) from case)	
	Mounting torque, 6-32 or M3 screw.	10 lbf•in (1.1N•m)	

Thermal Resistance

	Parameter	Typ.	Max.	Units
$R_{\theta JC}$	Junction-to-Case	–––	0.77	°C/W
$R_{\theta CS}$	Case-to-Sink, Flat, Greased Surface	0.24	–––	
$R_{\theta JA}$	Junction-to-Ambient, typical socket mount	–––	40	
Wt	Weight	6 (0.21)	–––	g (oz)

Electrical Characteristics @ T_J = 25°C (unless otherwise specified)

	Parameter	Min.	Typ.	Max.	Units	Conditions	
$V_{(BR)CES}$	Collector-to-Emitter Breakdown Voltage	600	—	—	V	V_{GE} = 0V, I_C = 250µA	
$V_{(BR)ECS}$	Emitter-to-Collector Breakdown Voltage ④	18	—	—	V	V_{GE} = 0V, I_C = 1.0A	
$\Delta V_{(BR)CES}/\Delta T_J$	Temperature Coeff. of Breakdown Voltage	—	0.46	—	V/°C	V_{GE} = 0V, I_C = 1.0mA	
$V_{CE(ON)}$	Collector-to-Emitter Saturation Voltage	—	2.10	2.6	V	I_C = 25A	V_{GE} = 15V
		—	2.70	—		I_C = 42A	See Fig.2, 5
		—	2.14	—		I_C = 25A , T_J = 150°C	
$V_{GE(th)}$	Gate Threshold Voltage	3.0	—	6.0		V_{CE} = V_{GE}, I_C = 250µA	
$\Delta V_{GE(th)}/\Delta T_J$	Temperature Coeff. of Threshold Voltage	—	-13	—	mV/°C	V_{CE} = V_{GE}, I_C = 250µA	
g_{fe}	Forward Transconductance ⑤	7.0	14	—	S	V_{CE} = 100 V, I_C = 25A	
I_{CES}	Zero Gate Voltage Collector Current	—	—	250	µA	V_{GE} = 0V, V_{CE} = 600V	
		—	—	2.0		V_{GE} = 0V, V_{CE} = 10V, T_J = 25°C	
		—	—	2000		V_{GE} = 0V, V_{CE} = 600V, T_J = 150°C	
I_{GES}	Gate-to-Emitter Leakage Current	—	—	±100	nA	V_{GE} = ±20V	

Switching Characteristics @ T_J = 25°C (unless otherwise specified)

	Parameter	Min.	Typ.	Max.	Units	Conditions	
Q_g	Total Gate Charge (turn-on)	—	120	180	nC	I_C = 25A	
Q_{ge}	Gate - Emitter Charge (turn-on)	—	16	24		V_{CC} = 400V	See Fig.8
Q_{gc}	Gate - Collector Charge (turn-on)	—	51	77		V_{GE} = 15V	
$t_{d(on)}$	Turn-On Delay Time	—	30	—	ns		
t_r	Rise Time	—	15	—		T_J = 25°C	
$t_{d(off)}$	Turn-Off Delay Time	—	140	210		I_C = 25A, V_{CC} = 480V	
t_f	Fall Time	—	140	210		V_{GE} = 15V, R_G = 10Ω	
E_{on}	Turn-On Switching Loss	—	0.62	—	mJ	Energy losses include "tail"	
E_{off}	Turn-Off Switching Loss	—	0.33	—		See Fig. 9,10,14	
E_{ts}	Total Switching Loss	—	0.95	1.4			
t_{sc}	Short Circuit Withstand Time	10	—	—	µs	V_{CC} = 400V, T_J = 125°C V_{GE} = 15V, R_G = 10Ω , V_{CPK} < 500V	
$t_{d(on)}$	Turn-On Delay Time	—	30	—	ns	T_J = 150°C,	
t_r	Rise Time	—	18	—		I_C = 25A, V_{CC} = 480V	
$t_{d(off)}$	Turn-Off Delay Time	—	190	—		V_{GE} = 15V, R_G = 10Ω	
t_f	Fall Time	—	150	—		Energy losses include "tail"	
E_{ts}	Total Switching Loss	—	1.9	—	mJ	See Fig. 11,14	
L_E	Internal Emitter Inductance	—	13	—	nH	Measured 5mm from package	
C_{ies}	Input Capacitance	—	1600	—	pF	V_{GE} = 0V	
C_{oes}	Output Capacitance	—	130	—		V_{CC} = 30V	See Fig. 7
C_{res}	Reverse Transfer Capacitance	—	55	—		f = 1.0MHz	

Notes:

① Repetitive rating; V_{GE} = 20V, pulse width limited by max. junction temperature. (See fig. 13b)

② V_{CC} = 80%(V_{CES}), V_{GE} = 20V, L = 10µH, R_G = 10Ω, (See fig. 13a)

③ Repetitive rating; pulse width limited by maximum junction temperature.

④ Pulse width ≤ 80µs; duty factor ≤ 0.1%.

⑤ Pulse width 5.0µs, single shot.

TO-247AC Package Outline

Dimensions are shown in millimeters (inches)

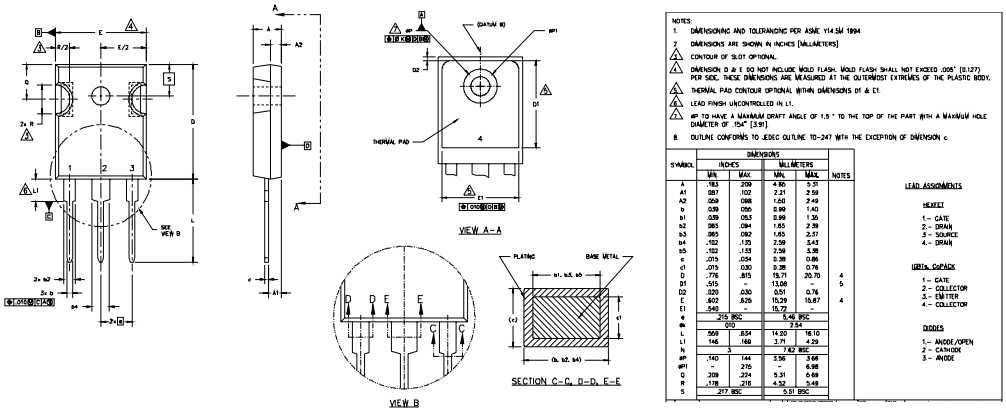

TO-247AC Part Marking Information

EXAMPLE: THIS IS AN IRFPE30
WITH ASSEMBLY
LOT CODE 5657
ASSEMBLED ON WW 35, 2000
IN THE ASSEMBLY LINE "H"

Note: "P" in assembly line position indicates "Lead-Free"

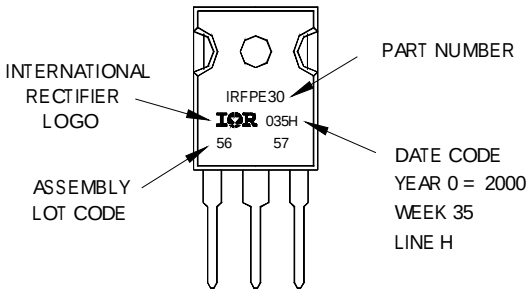

Data and specifications subject to change without notice.